- Electrical input from this side.
- Leave 3 feet from wall for service

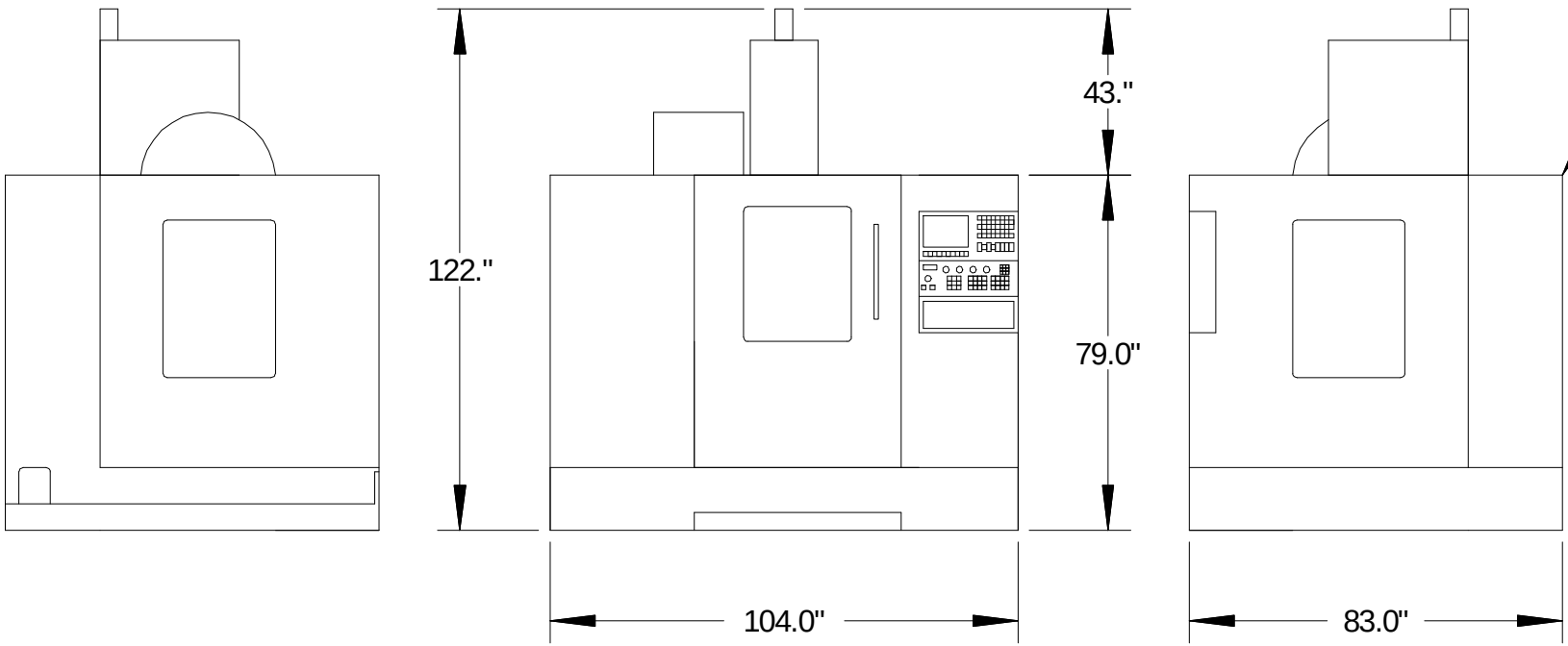

Coolant Pan pulls out
from the front for cleaning

5X-300

Power: 220 VAC, 3Phase, 27KVA (85amps),
Air: 85 PSI (5cfm)
Coolant: 55 gallons

GANESH