SIZE	DRAWING	SHT.	REV.	PROPRIETARY INFORMATION
D		1 OF 1		

QTY.	PART NUMBER	ITEM DESCRIPTION	ITEM

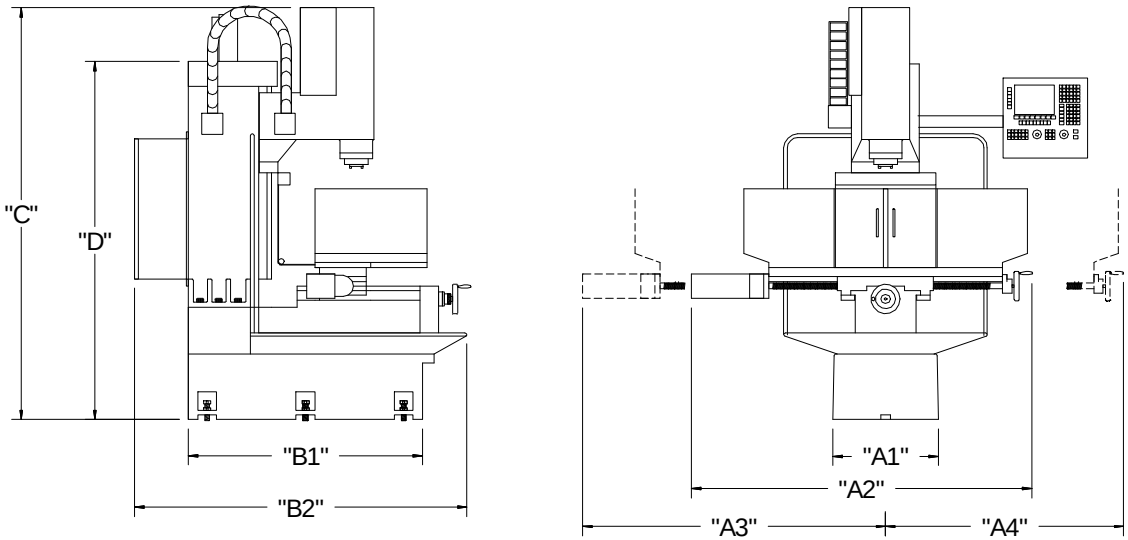

Model	GBM-2616
A1	23"
A2	77"
A3	58"
A4	45"
B1	50"
B2	72"
C	90"
D	76"
Power requirements	220 VAC, 3 Phase, 30 amps
Coolant capacity	7.5 gallons (29 liters)

BED MILL 2616

REV	E.C.N. NO.	REVISION DESCRIPTION	REV BY	DATE	CHK'D BY	DATE	APPROVED BY	DATE	SHT.	OF

SURFACE TREATMENT

HEAT TREATMENT

FIRST USED ON

EXCEPT AS NOTED: ALL CORNERS MUST BE AS FOLLOWS
INSIDE: .050" X 45° OR .06" R MAX
OUTSIDE: .030" X 45° OR .06" R

EXCEPT AS NOTED: ALL WELDING TOLERANCE MUST BE AS FOLLOWS ±.12

EXCEPT AS NOTED: ALL DIMENSIONS IN INCHES TOLERANCE
DECIMAL
.0 ±.0300
.00 ±.0150
.000 ±.0050
.0000 ±.0030
ANGULAR ± 0°30'

THIRD ANGLE PROJECTION

GANESH

DESCRIPTION					
DRAWN	DATE	CHECKED	DATE	APPROVED	DATE
SCALE N/A	UNIT OF MEAS EA	SIZE D	DRAWING	SHT. OF	REV.