SIZE	DRAWING	SHEET	REV.	PROPRIETARY INFORMATION
D		1 OF 1		

QTY.	PART NUMBER	ITEM DESCRIPTION	ITEM

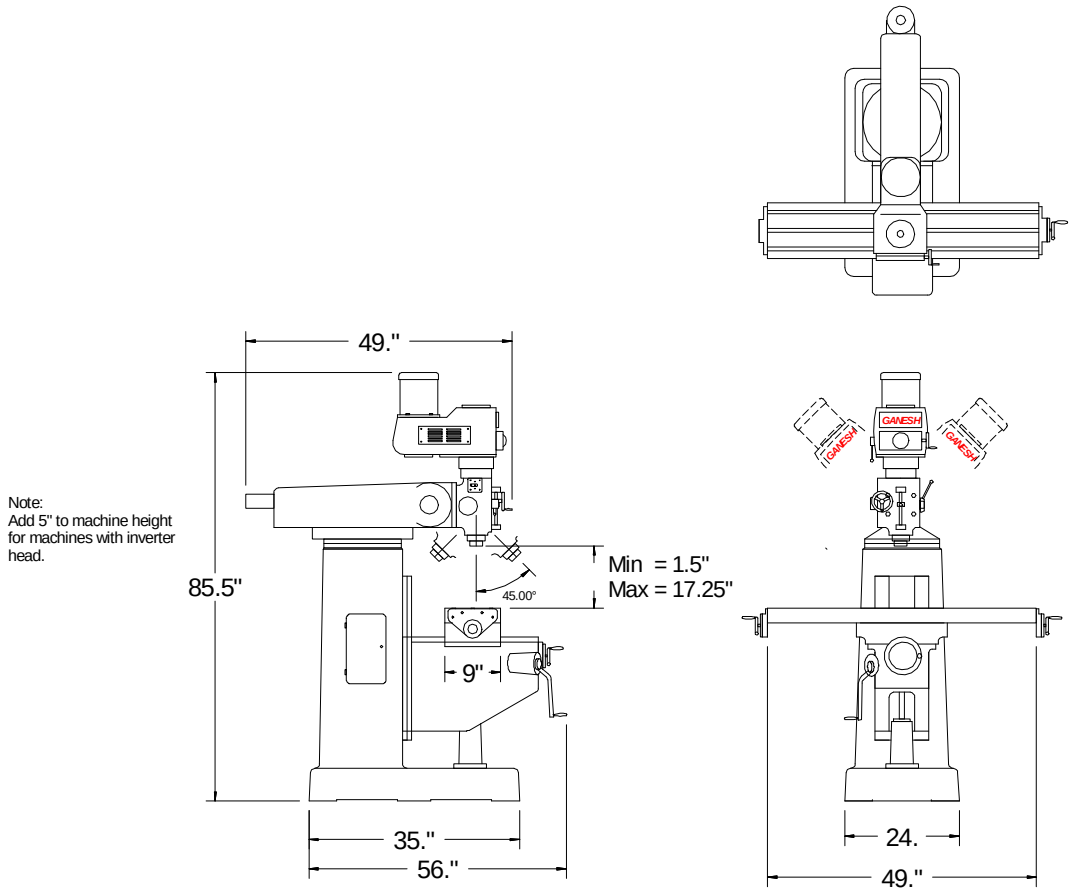

Note:
Add 5" to machine height for machines with inverter head.

GMV-2

Power: 220 VAC, 3Phase, 9.5 amps,
Coolant: 8. gallons (30 liters)

REV	E.C.N. NO.	REVISION DESCRIPTION	REV BY	DATE	CHK BY	DATE	APPROVA BY	DATE

SURFACE TREATMENT

HEAT TREATMENT

FIRST USED ON

EXCEPT AS NOTED: ALL CORNERS MUST BE AS FOLLOWS
RADIUS: .050" X 45° OR .00" R MAX
CUTTIDE: .030" X 45° OR .00" R

EXCEPT AS NOTED: ALL DIMENSIONS MUST BE AS FOLLOWS 4.12

EXCEPT AS NOTED: ALL DIMENSIONS IN INCHES TOLERANCE
DECIMAL
.0 ±.0300
.00 ±.0150
.000 ±.0050
.0000 ±.0030
ANGULAR ± 0°30'

THIRD ANGLE PROJECTION

GANESH

DESCRIPTION

DRAWN	DATE	CHECKED	DATE	APPROVED	DATE

SCALE: N/A
UNIT OF MEAS: EA
SIZE: D
DRAWING
SHT. OF
REV.